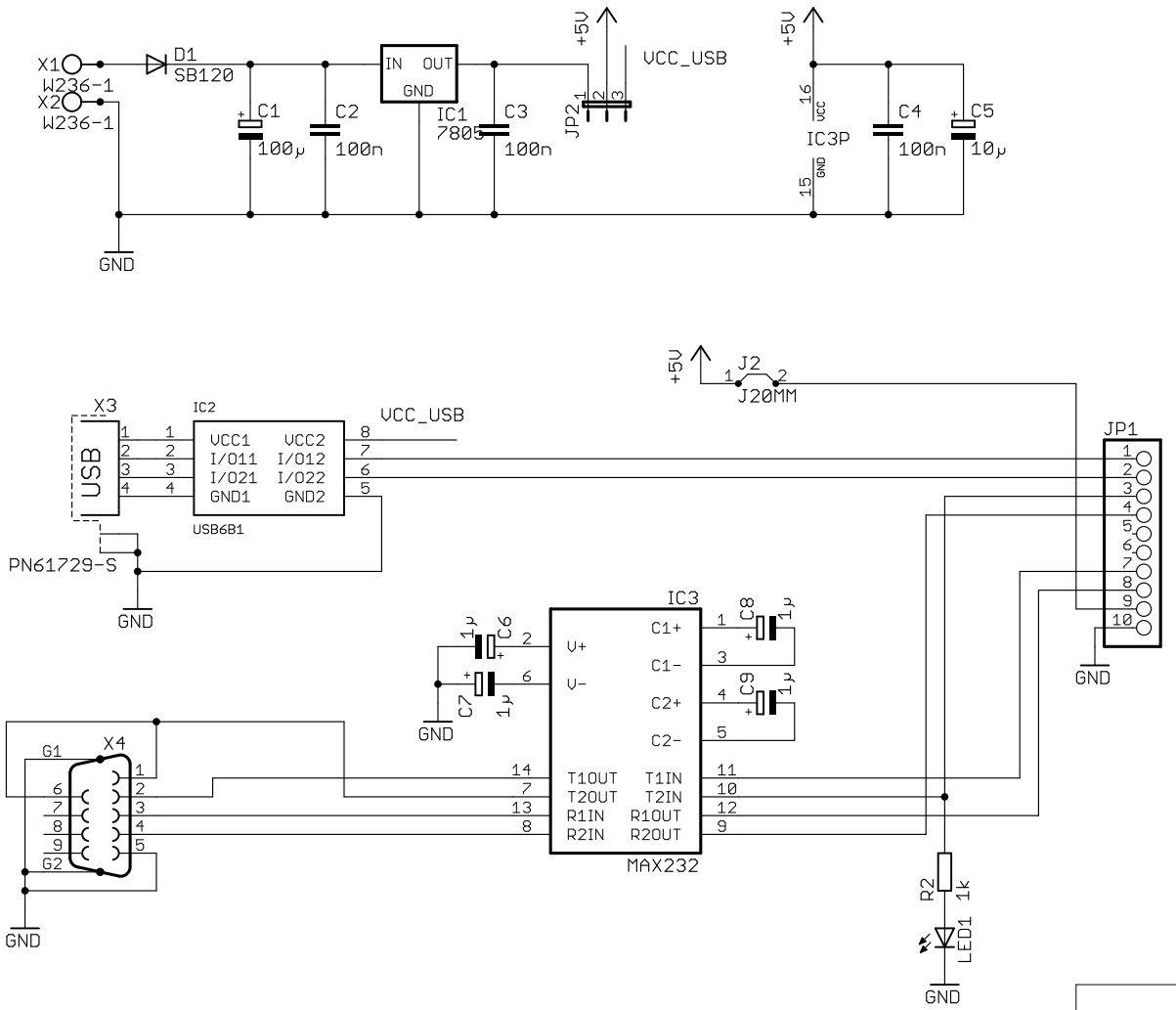


| | |
|---|---|
| TITLE: interface_turmuhr | |
| Document Number: | REV: |
| Date: 01.06.2009 20:39:46 | Sheet: 1/1 |