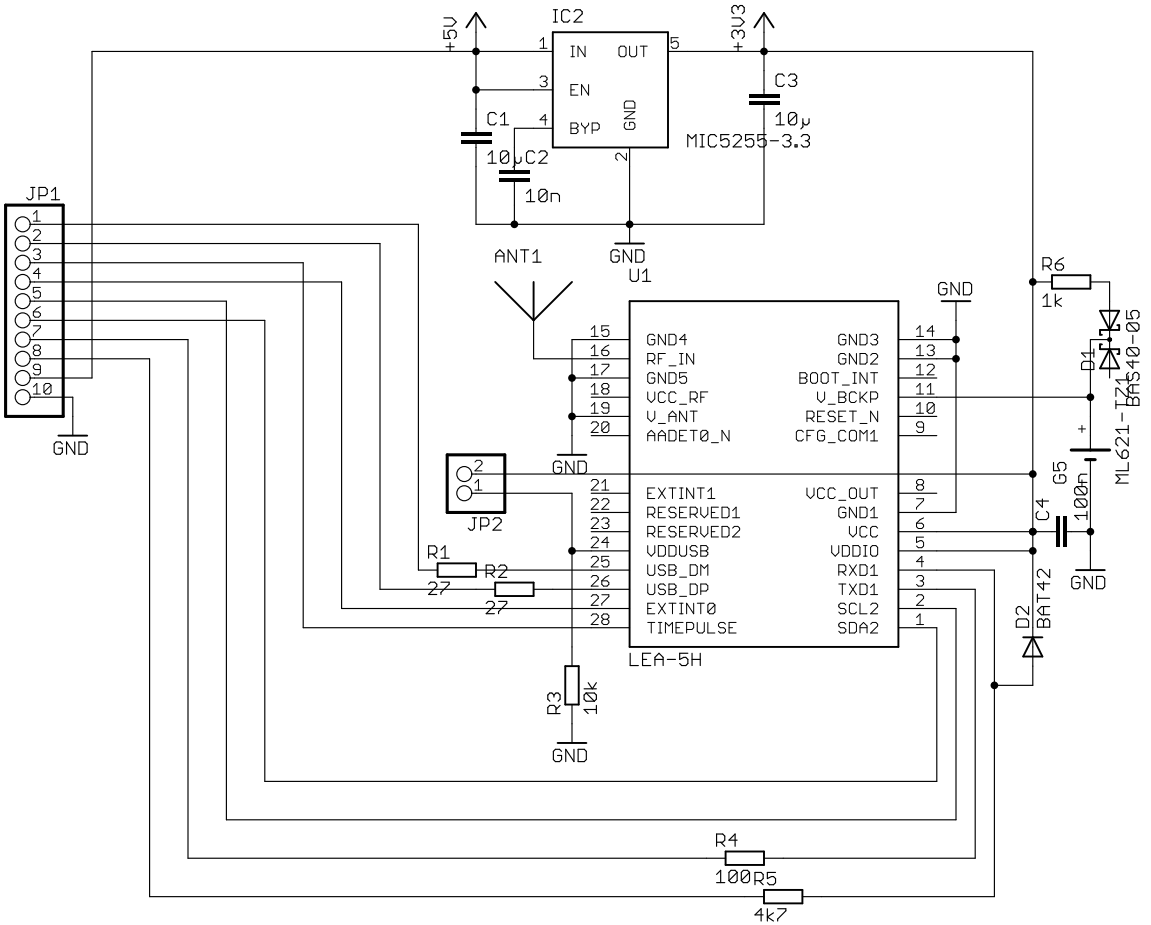

TITLE: gps	
Document Number:	REV:
Date: 01.06.2009 20:40:39	Sheet: 1/1